64mm Supreme Cavity Slider Unit
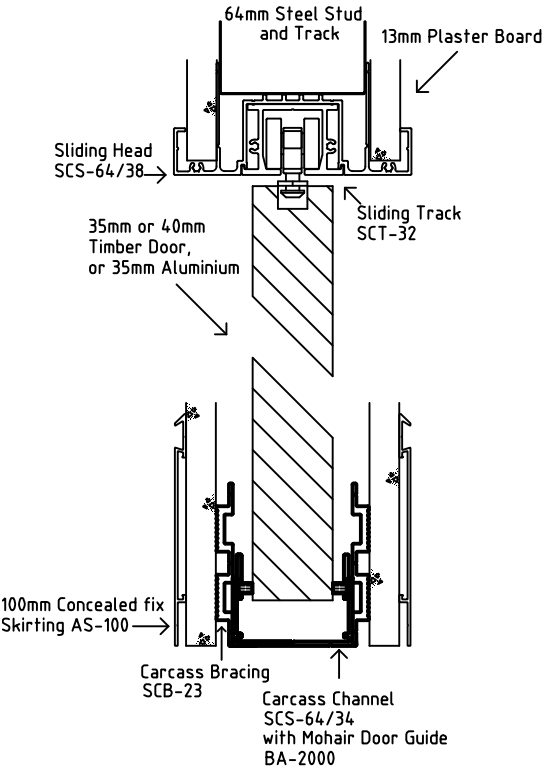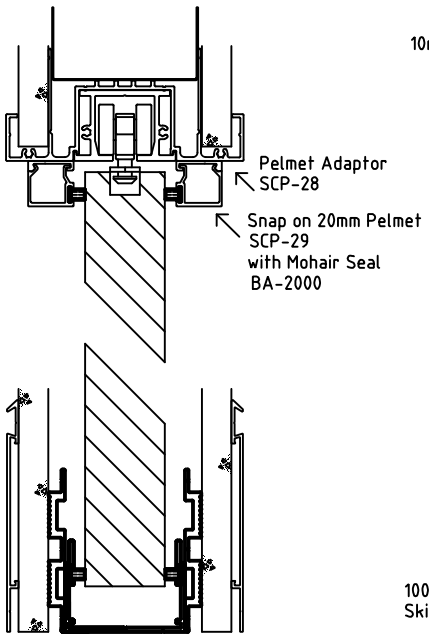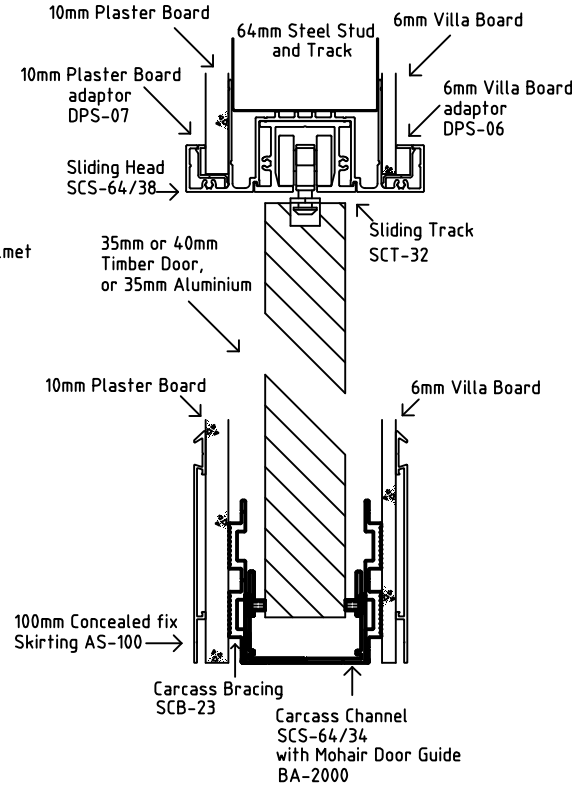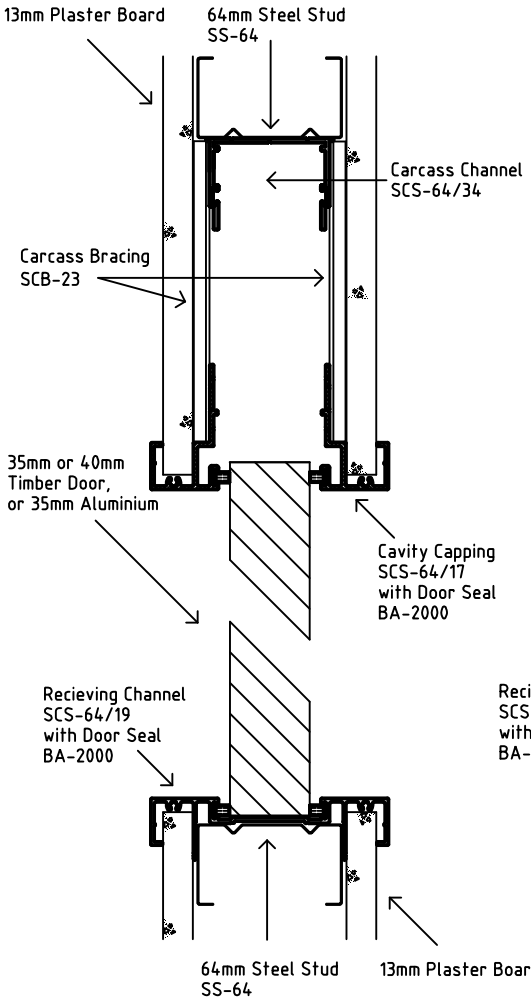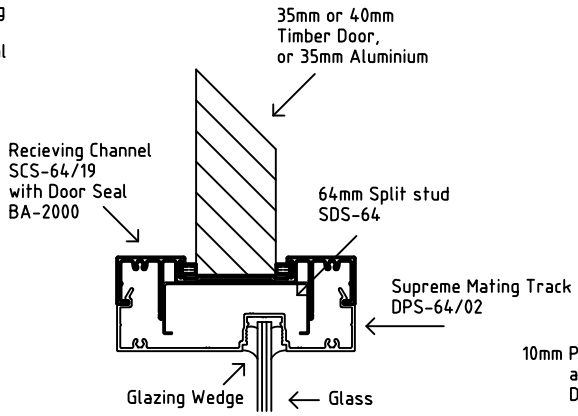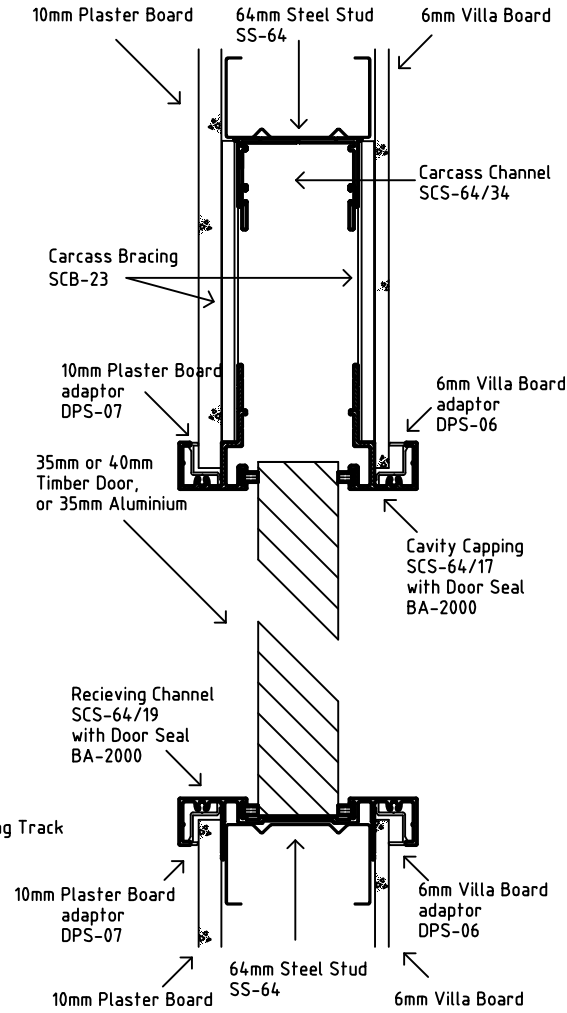
Adapted for 6mm Villa Board or 10mm Plaster Board